ALPHA

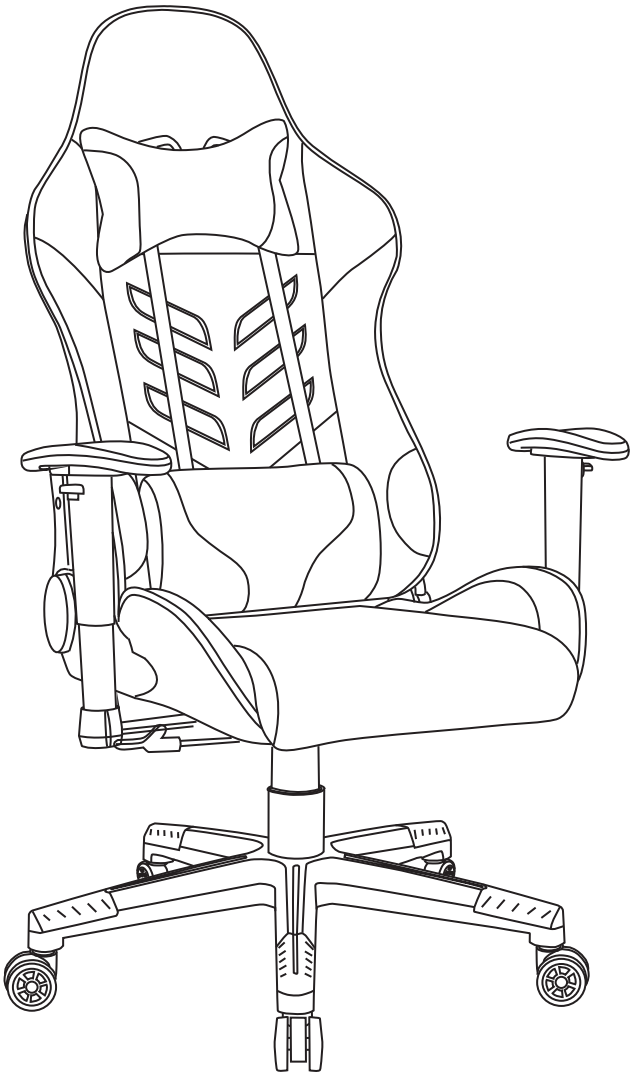

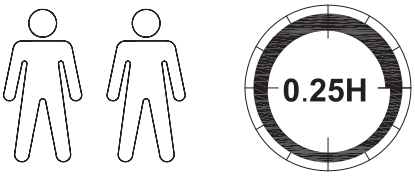

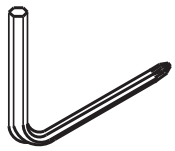

27/04/2021

			√
①	1	840x530x170	
②	1	540x530x160	
③	1	270x280x230	
④	1	270x280x230	
⑤	1	70x280x175	
⑥	1	Φ50x280	
⑦	1	Φ700x90	
⑧	5	Φ60	
⑨	1	290x75	
⑩	1	295x225x35	

			√
⑪	1	210x300x25	
⑫	1	180x80x30	
⑭	1	75x250x20	
⑬	1	115x245x45	
⑮	1	90x200x20	
⑯	1	300x280x90	
⑰	1	310x190x80	

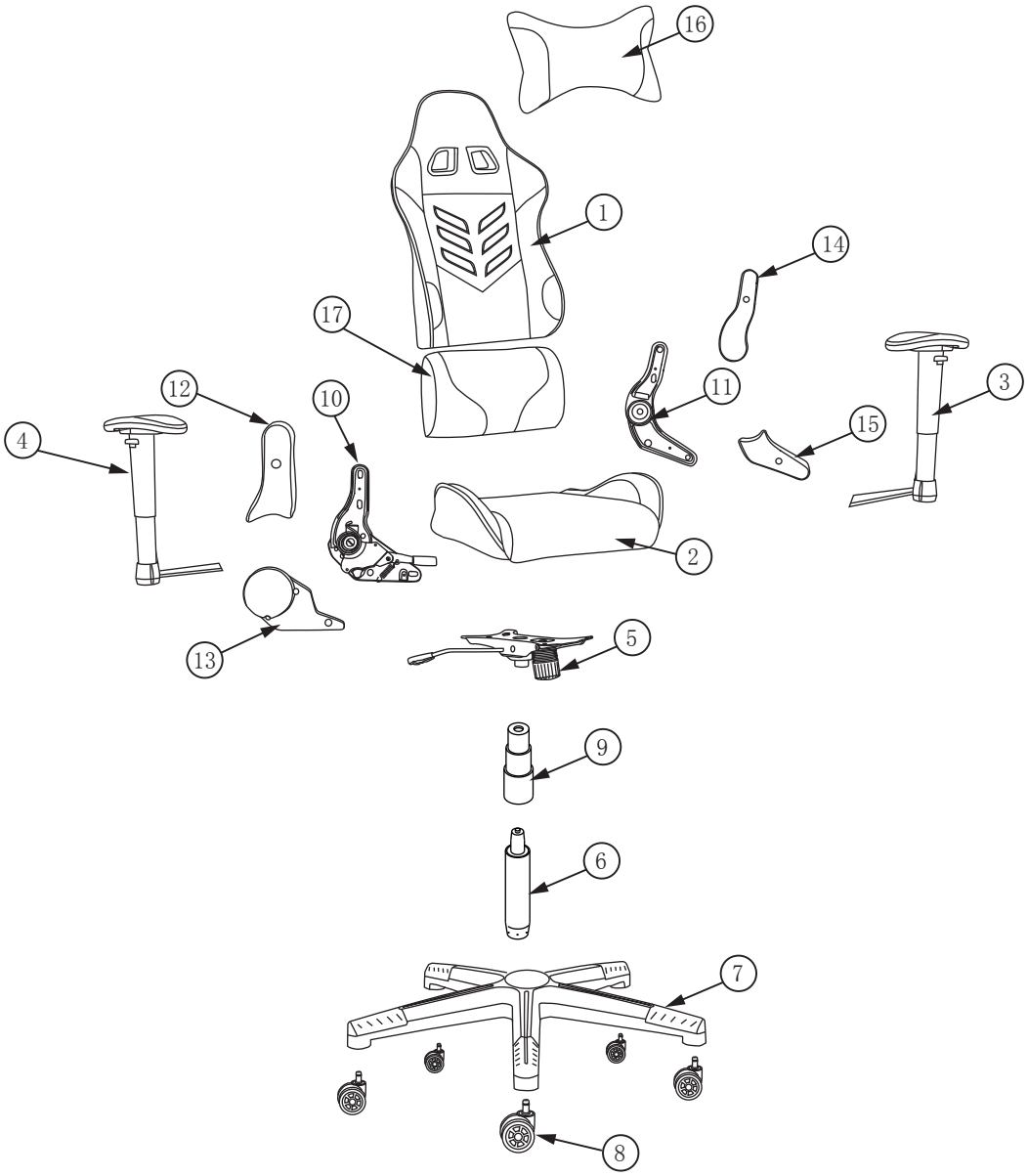

A x 16	B x 6	C x 1	D x 8	
M8 x 25 mm	M5 x 10 mm	6 mm	Φ18 x Φ8 x 1.2mm	

1

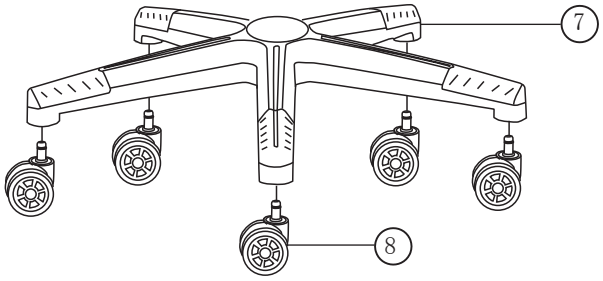

2

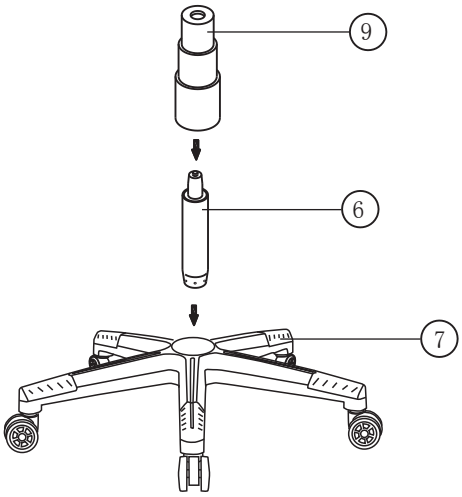

3

A x 2	D x 2
M8 x 25 mm	Φ18 x Φ8 x 1.2mm

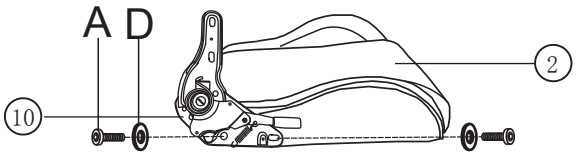

4

A x 2	D x 2
M8 x 25 mm	Φ18 x Φ8 x 1.2mm

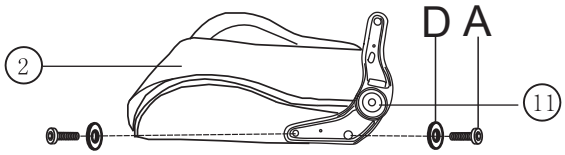

5

A x 4
M8 x 25 mm

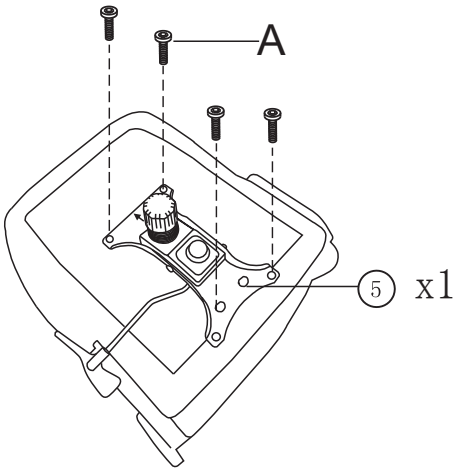

6

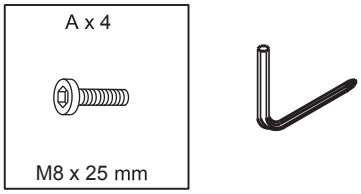

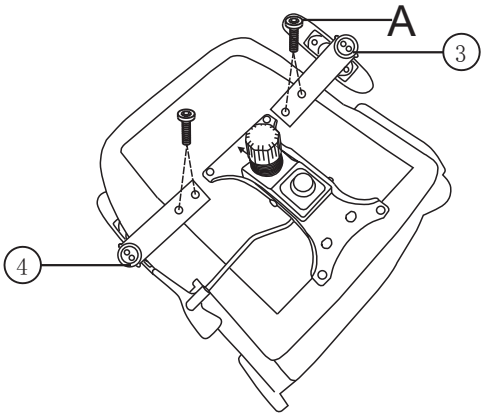

7

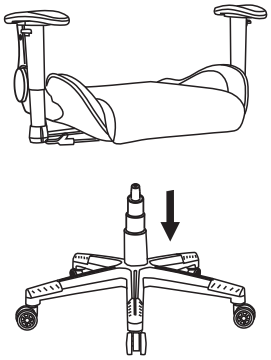

8

A x 2	D x 2
M8 x 25 mm	Φ18 x Φ8 x 1.2mm

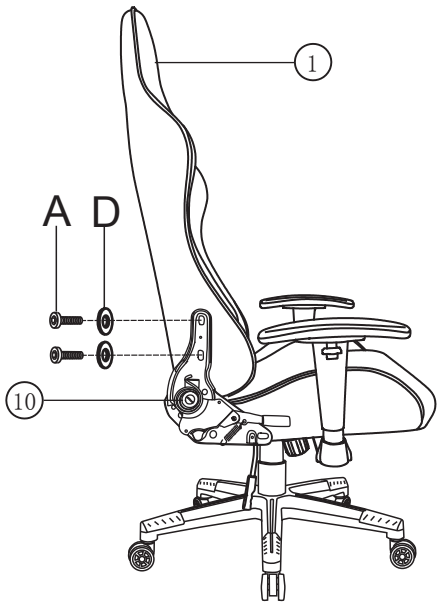

9

A x 2	D x 2
M8 x 25 mm	Φ18 x Φ8 x 1.2mm

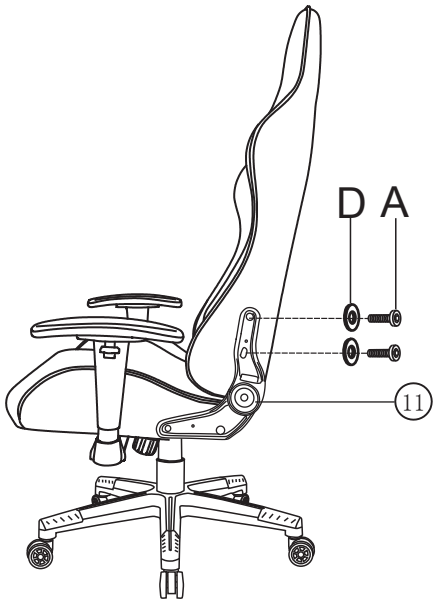

10

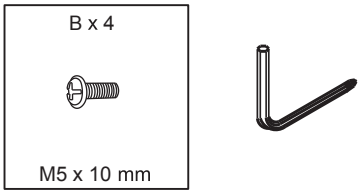

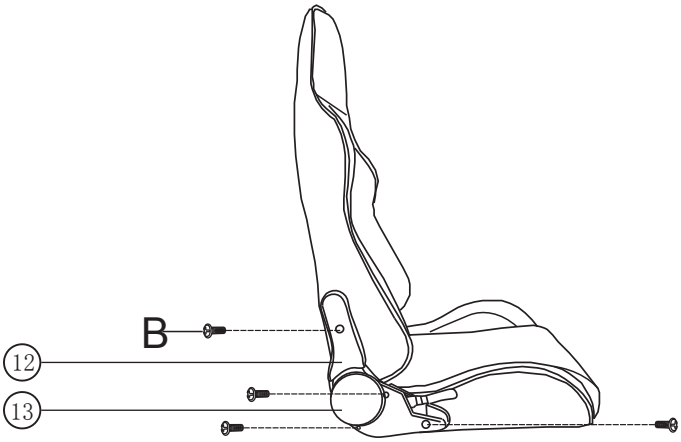

11

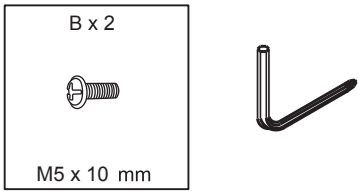

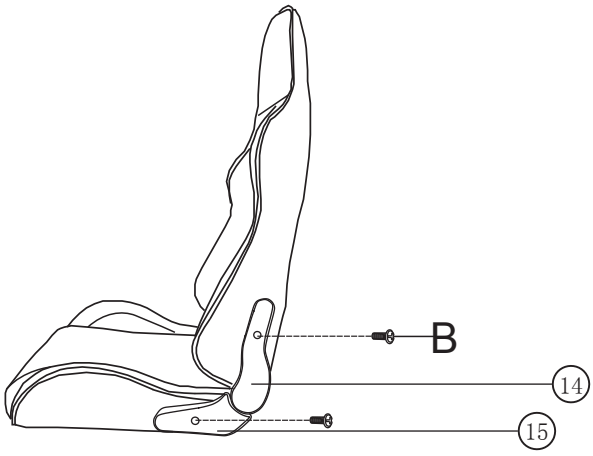

12

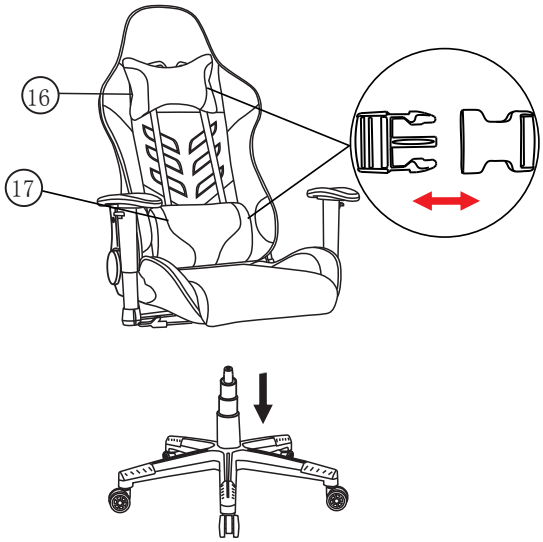
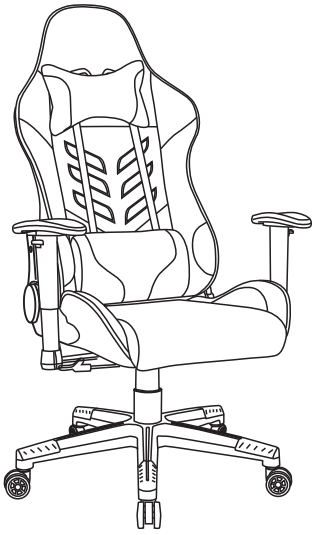
13